0 ~ 3	>3 ~ 6	>6 ~ 10	>10 ~ 18	>18 ~ 30	>30 ~ 50	>50 ~ 80	>120 ~ 180	>180 ~ 250	>250 ~ 315	>315 ~ 400	>400 ~ 500	>500
±0.12	±0.18	±0.22	±0.26	±0.31	±0.37	±0.57	±0.80	±0.93	±1.05	±1.60	±2.20	±2.50

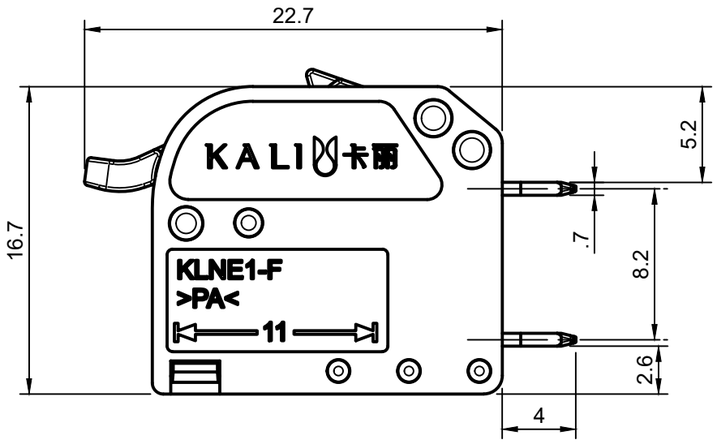

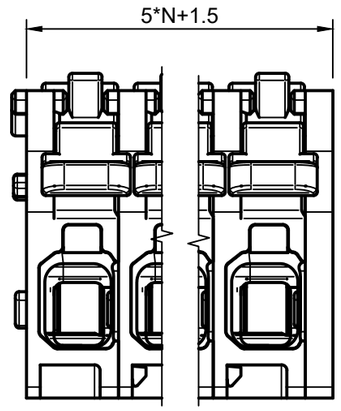

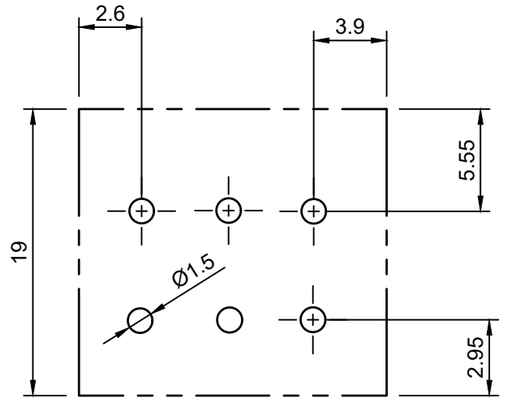

Footpoint
for information only

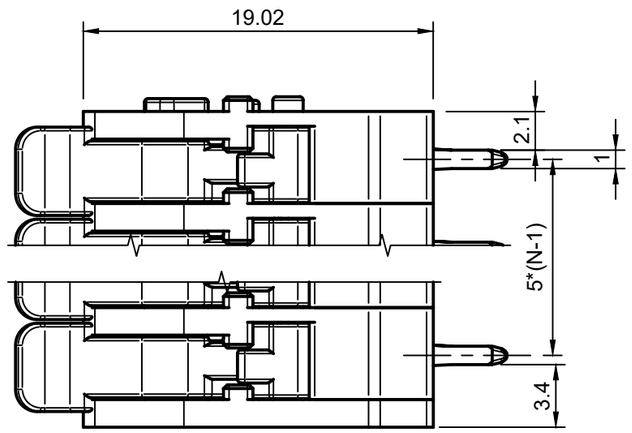

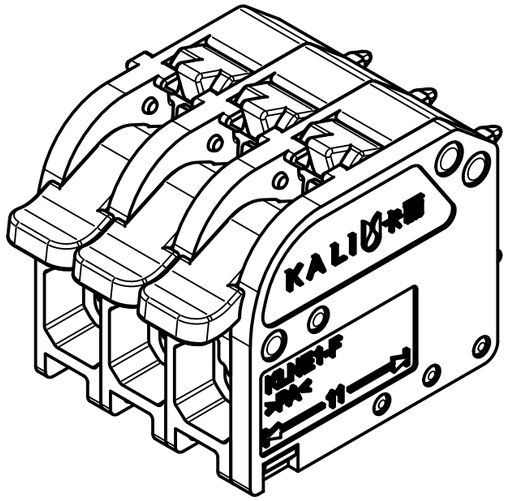

UL 标准/UL Standard	UL1059
Use Group	B / D
额定电压/电流/Rated Voltage(V)/Current(A)	300V/20A / 300V/10A
过压类别/Overvoltage Category/污染等级/Pollution Degree	III/3 / III/2 / II/2
额定电压/电流/Rated Voltage(V)/Current(A)	/ / 400V/24A /
额定脉冲电压（kV）/Rate Impulse Voltage(kV)	/ / 4kV /
线径范围（硬线&软线）/Wire Range(rigid&flexible)(mm²/AWG)	0.5...2.5 / 20...12
间距/Pitch(mm)/线数范围/Poles	5.0/N=2~24P
剥线长度/Stripping length(mm)	9-10
使用温度范围Operating temperature(℃)	-40~+85
符合RoHS环保要求/Conform to RoHS	YES

Transfer or duplication of this document as well as the utilization or communication of its contents are prohibited unless explicit authorization is granted. Violations will be liable for compensation. All rights reserved for patent, utility model or designs registrations.

REV	ECN	DESCRIPTION	DRFT	DATE

MAT NO.:
STATUS:
APPD:
CHKD:
DRFT:Nirw 2025.03.10

SIZE:A3 mm

卡丽智能科技（嘉兴）有限公司
KALI Intelligent Technology(Jiaxing) Co.,LTD

NAME:
KLNE1-F-5.00-V-N-GY

DRAWING NO.: 10000047 REV V0

TYPR:CUSTOMER DRAWING SCALE:3:1 SHEET 1 / 1